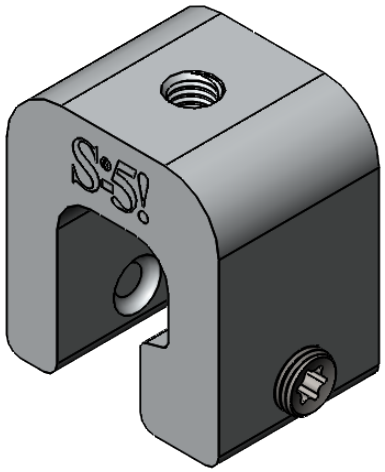

TOP

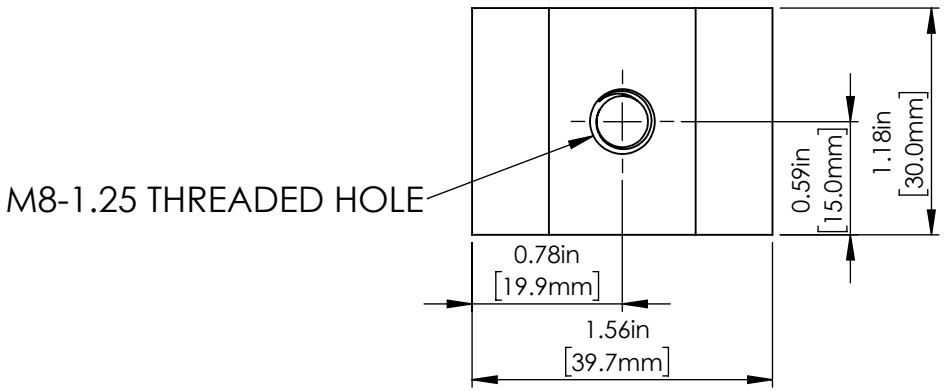

FRONT

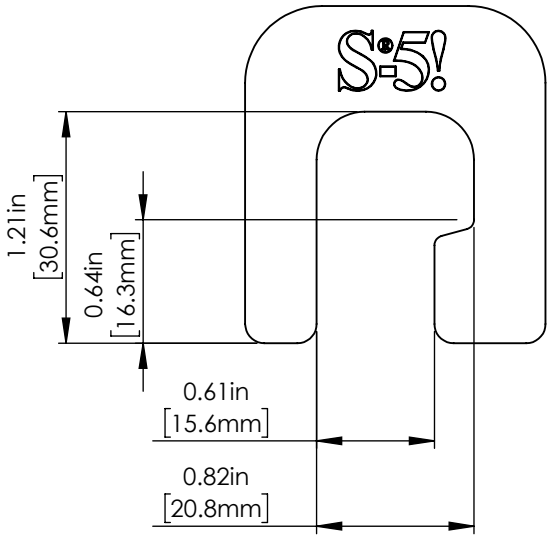

RIGHT

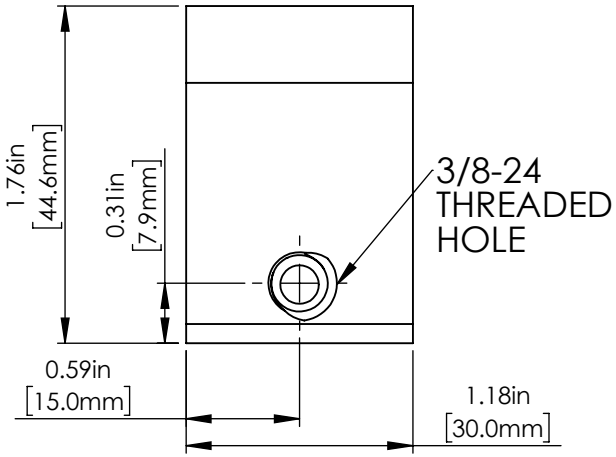

FOR STANDING SEAM SPECIFIC MECHANICAL LOAD TEST INFORMATION AND CLAMP INSTALLATION INFORMATION PLEASE VISIT: WWW.S-5.COM

General Notes:

1. S-5-MX Mini Clamp
2. 3/8-24 SS Round Point Setscrew (T30 Torx Drive)
3. Example Roof

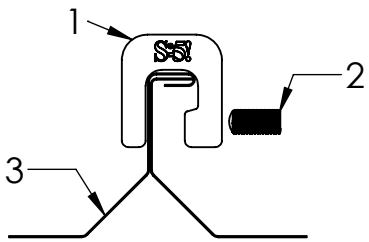

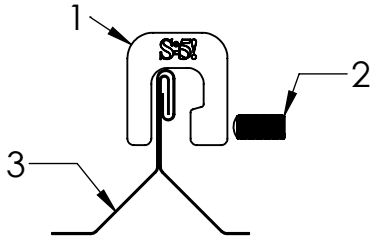

MATERIAL: 6061M T6	S®-5! The Right Way!™	METAL ROOF INNOVATIONS, LTD. 8750 WALKER RD COLORADO SPRINGS, CO 80908 719-495-0518 719-495-0045(FAX)
EST ASSEMBLY WEIGTH: .228 lbs [103 g]		
SUPPLIED HARDWARE: 3/8-24 Round Point Setscrew	TITLE: S-5-MX Mini [CCD]	
SCALE: 1:1	DRAWING NO. KR-C-1-E	DRAWN BY JW / DATE 8/3/2020
WEIGHTS: Clamp: .21 lbs [95 g]; Setscrew: .018 lbs [8 g]; Bolt: NO BOLT	S-5!® PRODUCTS ARE PROTECTED BY MULTIPLE U.S. PATENTS INCLUDING 5,228,248, 5,983,588 AND 6,164,033 (OTHERS ISSUED AND PENDING). EUROPEAN PATENTS ARE ALSO APPLIED FOR AND PENDING UNDER THE PATENT COOPERATION TREATY WITH DIVISIONAL FILING RIGHTS RETAINED. METAL ROOF INNOVATIONS, LTD. (LICENSOR OF S-5!® TECHNOLOGY) AGGRESSIVELY PROSECUTES PATENT INFRINGEMENT.	